# Single Paddle Diverter (SPD)

## ADVANTAGES:

- **Standard model available for belt widths 24” to 36” (610mm to 914mm) wide**
- **Oversized model available for belt widths 39” to 48” (991mm to 1219mm) wide**
- **Left or Right-hand discharge configurations**
- **Quick cycle times compatible with belt speeds of 90 to 240 FPM (27.43 to 73.15 m/min)**
- **Efficient and effective sortation solution**


## OVERVIEW:

The G&S Single Paddle Diverter (SPD) sortation device is a gentle and efficient means of diverting baggage in airport baggage screening systems. The SPD redirects baggage effectively from the main line to a secondary line by means of a vertically oriented single paddle conveyor that is designed to pivot towards a discharge chute, forming a powered deflecting face oriented 45° to baggage flow. The unit is typically preceded by a series of queue conveyors, which control flow and optimize baggage spacing.

Quick cycle times are accomplished by a smooth, efficient actuating motion that is capable of redirecting baggage of varying sizes as large as 120 pounds (54.43kgs), including baggage tubs and golf clubs. The speed of the powered face conveyor is proportional to that of the main-line conveyor, resulting in a belt speed relationship that maintains baggage orientation from one conveyor line to the next, optimizing baggage transfer and minimizing baggage jams.

The pivoting paddle conveyor belt *is driven* with a single synchronous belt and sprocket configuration, and is powered by a dedicated drive. This gear motor is coupled with a variable frequency drive (VFD) that allows the paddle’s belt speed to be adjusted to correspond with the main line conveyor, resulting in a flexible, effective baggage transfer.

The pivoting paddle conveyor *cycles open and closed* using a simple actuator / connecting arm mechanism that is controlled using inductive proximity switches that ensures the paddle extends and retracts for repeated and reliable operations. The cycling mechanism is powered by a dedicated gear motor and is combined with a variable frequency drive (VFD), providing full adjustment of acceleration, deceleration, and cycle rates on the actuating mechanism. This results in a simple and reliable system that eliminates the need for any clutch / brake modules.

### CONTROLS

Each SPD is equipped with its own electrical control panel, functioning as a stand-alone subsystem with its own integrated controls. This approach simplifies overall system controls and requires only feed power supply, and I/O signals from the Baggage Handling System to trigger each cycle.

Safeguards are built into the SPD through the use of strategically placed photo eyes that detect baggage at different stages along the unit and in the discharge chute. These photo eyes monitor the discharge chute and ensure that baggage is not present when the paddle is mid-cycle and detect any baggage jams immediately.

### FRAME

- Rigid, box frame design
- Accurate, convenient mounting point for all components

The SPD is assembled on a rigid box frame that provides accurate, convenient mounting points for the pivoting paddle conveyor assembly, the motors, drive, and cycling mechanism, as well as the side guards and protective guarding. The top surface of the frame also doubles as a slider bed and has the baggage discharge chute built into it.

Constructed from formed mild steel and reinforced using standard structural steel sections, the frame is welded in quality controlled jigs to guarantee accurate component alignment.

### GUARDING

- Ensures safety to operators and maintenance personnel

A removable protective enclosure is provided over the cycling mechanism, paddle conveyor gear motors, and encloses the synchronous drive components. Additional safety features are built into the guarding in that when removed, the SPD is fully disabled.

### PIVOTING "PADDLE" CONVEYOR:

- Lightweight, rigid design
- 3½" (89mm) wide x 12" (305mm) high x 70¾" (1797mm) long

The paddle conveyor is built around a heavy-gauge support that is mounted to the frame, providing the structure that the paddle pivots around. The lightweight, yet durable, body of each conveyor consists of a reinforced, formed mild steel body capable of withstanding the shock loading experienced when baggage is diverted

Power is transmitted to the belting by means of a drive shaft centered in the pivot support, and is transferred to the drive pulley through a standard power-chain configuration.

### PADDLE CONVEYOR BELTING:

- Black, longitudinally ribbed 2-ply woven polyester

Belting is vulcanized to form a uniform, continuous loop.

### MOTOR / REDUCER:

- SEW Eurodrive constant speed gear motors
- Variable Frequency Drive

Both the cycling mechanism and the paddle conveyors are powered by individual direct drive motor / gearbox assemblies, which are selected for their reliability, low-noise characteristics, and ease of maintenance.

## STANDARD SINGLE PADDLE DIVERTER

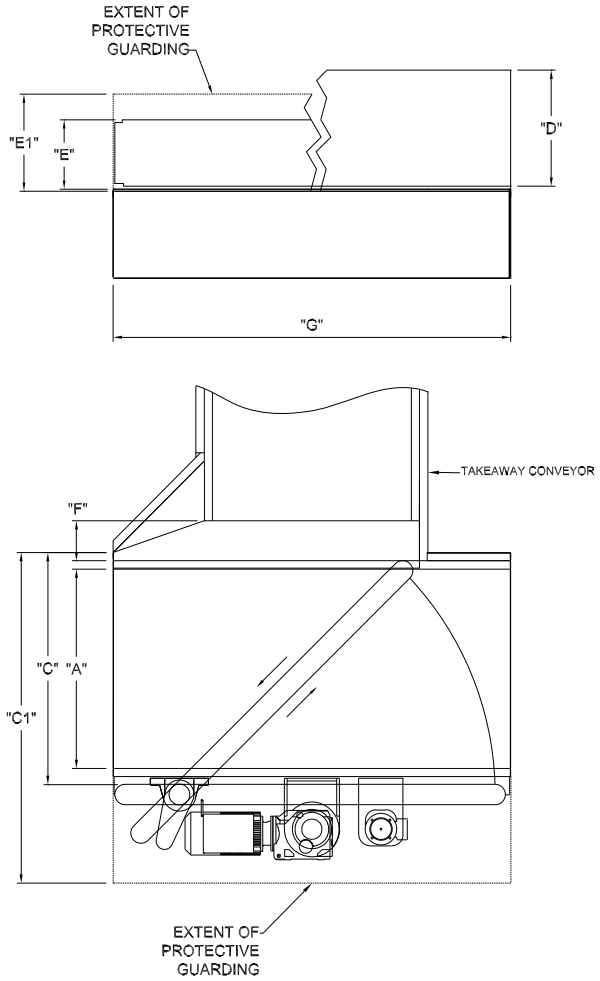


| SINGLE PADDLE DIVERTER SPECIFICATIONS | |
|---|---|
| **Description** | **G&S Standards** |
| **Dimensions** | |
| Belt Width ("A") | 36" (914mm) maximum |
| Between Frame Width ("B") | 39" (991mm) |
| Overall Frame Width ("C") | 42" (1067mm) |
| Overall Width ("C1") | 59 3/4" (1518mm) |
| Side Guard Height ("D") | 9" (229mm), 12" (305mm), 21" (533mm) |
| Paddle Height ("E") | 12 1/2" (318mm) |
| Protective Guarding Height ("E1") | 17 1/8" (436mm) |
| Spill Plate Length ("F") | 4 1/4" (108mm) minimum |
| Unit Length ("G") | 72" (1829mm) |
| **Specifications** | |
| Speed (Main Belt) | 90 - 240 ft/min (27.43 - 73.15 m/min) |
| Speed (Paddle Belt) | Proportional to main belt |
| Load Capacity (Live Load) | 40 lbs/ft (59.52 kg/m) maximum |
| Baggage Rate (bag / hr) | 1350 |

## OVERSIZED SINGLE PADDLE DIVERTER

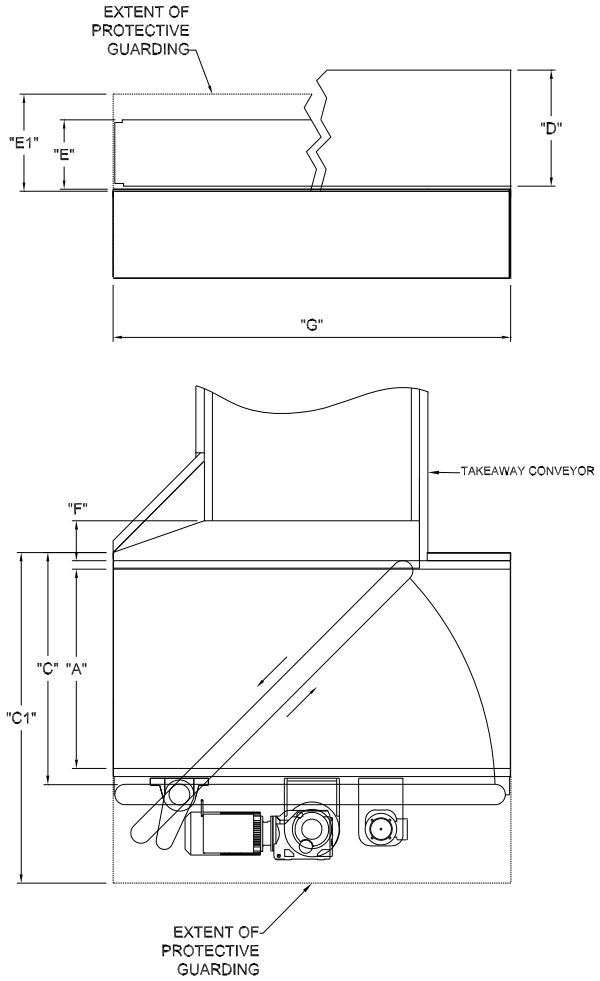


| OVERSIZED SINGLE PADDLE DIVERTER SPECIFICATIONS | |
|---|---|
| **Description** | **G&S Standards** |
| **Dimensions** | |
| Belt Width ("A") | 48" (1219mm) |
| Betw een Frame Width ("B") | 51" (1295mm) |
| Overall Frame Width ("C") | 55 3/4" (1416mm) |
| Overall Width ("C1") | 71 3/4" (1823mm) |
| Side Guard Height ("D") | 9" (229mm), 12" (305mm), 21" (533mm) |
| Paddle Height ("E") | 12 1/2" (318mm) |
| Protective Guarding Height ("E1") | 17 1/8" (436mm) |
| Spill Plate Length ("F") | 4 1/4" (108mm) minimum |
| Unit Length ("G") | 72" (1829mm) |
| **Specifications** | |
| Speed (Main Belt) | 90 - 240 ft/min (27.43 - 73.15 m/min) |
| Speed (Paddle Belt) | Proportional to main belt |
| Load Capacity (Live Load) | 40 lbs/ft (59.52 kg/m) maximum |
| Baggage Rate (bag / hr) | 1350 |

| Drive Options | | |
|---|---|---|
| Standard | | |
| Application | Make | Model |
| 90 Deg. Reducer | SEW Eurodrive | ST - TorqLOC |

| Belting Options | | | | |
|---|---|---|---|---|
| Standard | | | Optional | |
| Application | Make | Model | Make | Model |
| Main Belt | Nitta | BLC-18DKF2 | Ammeraal Beltech | EX 10/2 0+00 AS FR |
| | | | Habasit | NNT-10ESBU |
| | | | Siegling America | E12/2 V1/V1 M-FR Black |
| Paddle Belt | Nitta | BLRB-16A | | |

# SINGLE PADDLE DIVERTER (SPD)

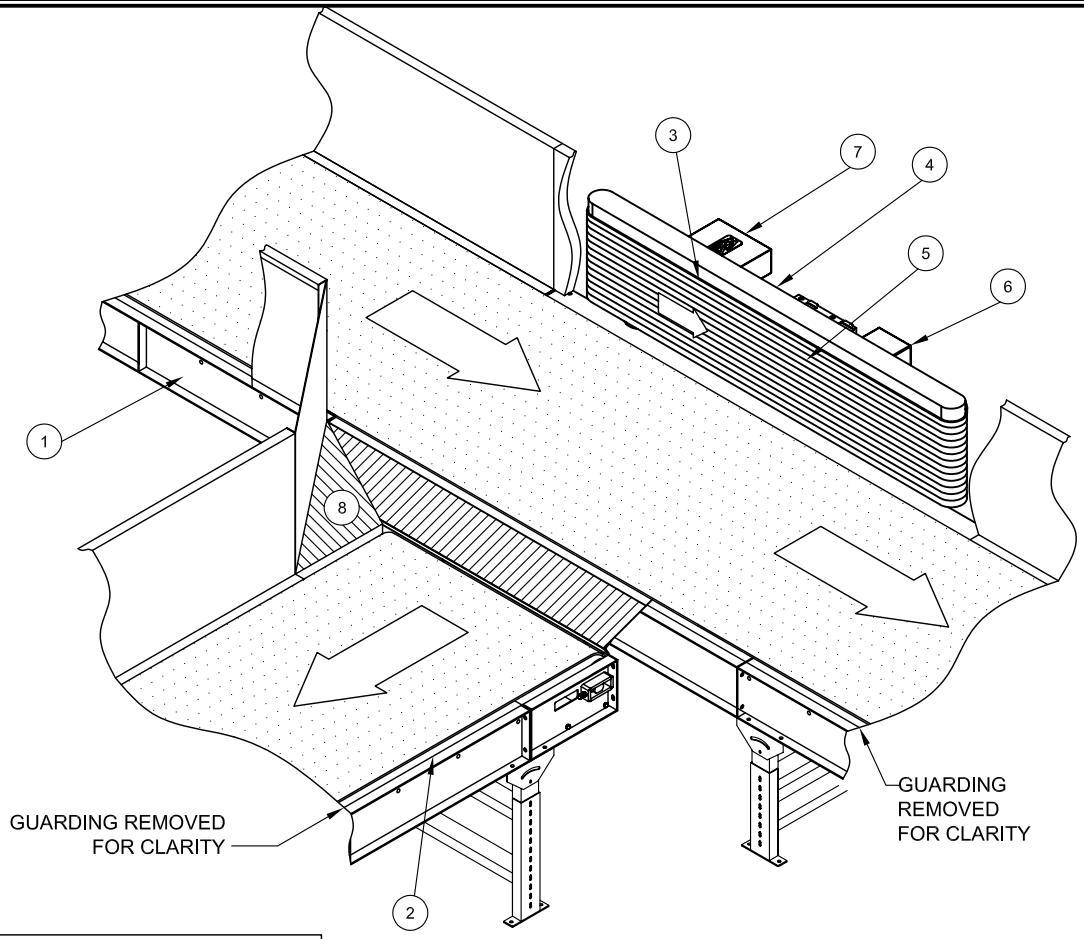


TYPICAL ISOMETRIC VIEW

RIGHT-HAND UNIT SHOWN

| ITEM | COMPONENT |
|---|---|
| 1 | Mainline Conveyor |
| 2 | Divert Line Conveyor |
| 3 | SPD "Paddle" |
| 4 | SPD Belt Cover |
| 5 | SPD "Paddle" Belt (TYP) |
| 6 | Motor/Gearbox Assembly |
| 7 | SPD "Paddle" Arm Mechanism |
| 8 | Lead-in High Side/Spill Plate |

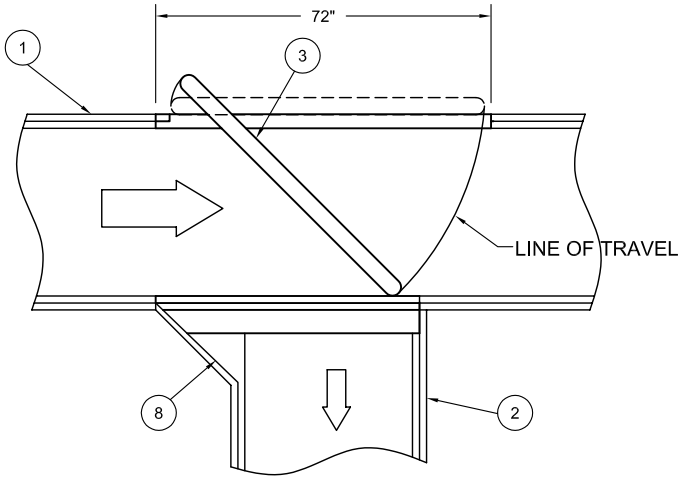


TYPICAL ELEVATION VIEW

RIGHT-HAND UNIT SHOWN

# Horizontal Sortation Device (HSD)

## ADVANTAGES:

- **Available for 36" (914mm) belt widths**
- **Left or Right hand discharge configurations**
- **Quick cycle times compatible with belt speeds ranging from 90 FPM (27.43 m/min) to 240 FPM (73.15 m/min)**
- **Effective and efficient sortation solution**

## OVERVIEW:

The G&S Horizontal Sortation Device (HSD) is a gentle and efficient means of diverting baggage in airport baggage screening and sorting systems. The HSD redirects baggage effectively from the main line to a secondary line using two paddles designed to automatically pivot towards each other, aligning to form a powered deflecting face oriented 45° to baggage flow. Baggage is redirected onto a discharge chute and removed by out feed conveyors oriented at 45°, 90°, or 180° to the main line flow. To assist in flow control and to optimize baggage spacing, each HSD unit is typically preceded by a series of queue conveyors.

Quick cycle times are accomplished by counter-balancing one lightweight paddle conveyor against the other, minimizing physical inertia, producing a smooth and efficient actuating motion. As a result, this simple design is capable of cycle times of 0.5 seconds, translating to a capacity of more than 30 bags per minute (1850 bags per hour) running at 240 feet per minute (73.15 m/min) with 96" (2438mm) front-to-front baggage gaps.

The speed of the paddle conveyor's powered face is proportional to that of the main-line conveyor resulting in a belt speed relationship which optimizes baggage transfer and minimizes baggage jams. These paddles are capable of redirecting baggage of varying sizes as large as 120 pounds (54.43 kg), including baggage tubs and golf clubs.

To better accommodate the varying needs of airport configurations and capacities, G&S Airport Conveyor offers the Horizontal Sortation Device in two models:

- **HSD-1000** – standard design for use on systems requiring a baggage flow of 1060 bags per hour or less.
- **HSD-1800** – high-speed design capable of 1850 bags per hour.

### GENERAL:

Each pivoting paddle belt *is driven* by a single synchronous belt and sprocket configuration and is powered by a dedicated drive. This gear motor is coupled with a variable frequency drive (VFD) that allows the paddle's belt speed to be adjusted to correspond with the main line conveyor, resulting in a flexible, effective baggage transfer.

The pivoting paddles *cycle open and closed* using a simple actuator / connecting arm mechanism that is controlled using inductive proximity switches that ensures the paddle extends and retracts for repeated and reliable operations. The cycling mechanism is powered by a dedicated gear motor and is combined with a variable frequency drive (VFD), providing full adjustment of acceleration, deceleration, and cycle rates on the actuating mechanism. This results in a simple and reliable system that eliminates the need for any clutch / brake modules.

### CONTROLS

Each HSD is equipped with its own electrical control panel, functioning as a stand-alone subsystem with its own integrated controls. This approach simplifies overall system controls and requires only feed power supply, and I/O signals from the Baggage Handling System to trigger each cycle.

Safeguards are built into the HSD through the use of strategically placed photo eyes that detect baggage at different stages along the unit and in the discharge chute. These photo eyes monitor the discharge chute and ensure that baggage is not present when the paddle is mid-cycle and detect any baggage jams immediately.

### FRAME

- Rigid, box frame design
- Accurate, convenient mounting point for all components

The HSD is assembled on a rigid box frame that provides accurate, convenient mounting points for the pivoting paddle conveyor assembly, the motors, drive, and cycling mechanism, as well as the side guards and protective guarding. The top surface of the frame also doubles as a slider bed and has the baggage discharge chute built into it.

Constructed from formed mild steel and reinforced using standard structural steel sections, the frame is welded in quality controlled jigs to guarantee accurate component alignment.

### GUARDING

- Ensures safety to operators and maintenance personnel

A removable protective enclosure is provided over the cycling mechanism, paddle conveyor gear motors, and encloses the synchronous drive components. Additional safety features are built into the guarding in that when removed, the HSD is fully disabled.

### PIVOTING "PADDLE" CONVEYOR:

- Lightweight, rigid design
- 3½" (89mm) wide x 12" (305mm) high x 70¾" (1797mm) long

The paddle conveyor is built around a heavy-gauge support that is mounted to the frame, providing the structure that the paddle pivots around. The lightweight, yet durable, body of each conveyor consists of a reinforced, formed mild steel body capable of withstanding the shock loading experienced when baggage is diverted

Power is transmitted to the belting by means of a drive shaft centered in the pivot support, and is transferred to the drive pulley through a standard power-chain configuration.

### PADDLE CONVEYOR BELTING:

- Black, longitudinally ribbed 2-ply woven polyester

Belting is vulcanized to form a uniform, continuous loop.

### MOTOR / REDUCER:

- SEW Eurodrive constant speed gear motors
- Variable Frequency Drive

Both the cycling mechanism and the paddle conveyors are powered by individual direct drive motor / gearbox assemblies, which are selected for their reliability, low-noise characteristics, and ease of maintenance.

# Horizontal Sortation Device (HSD)

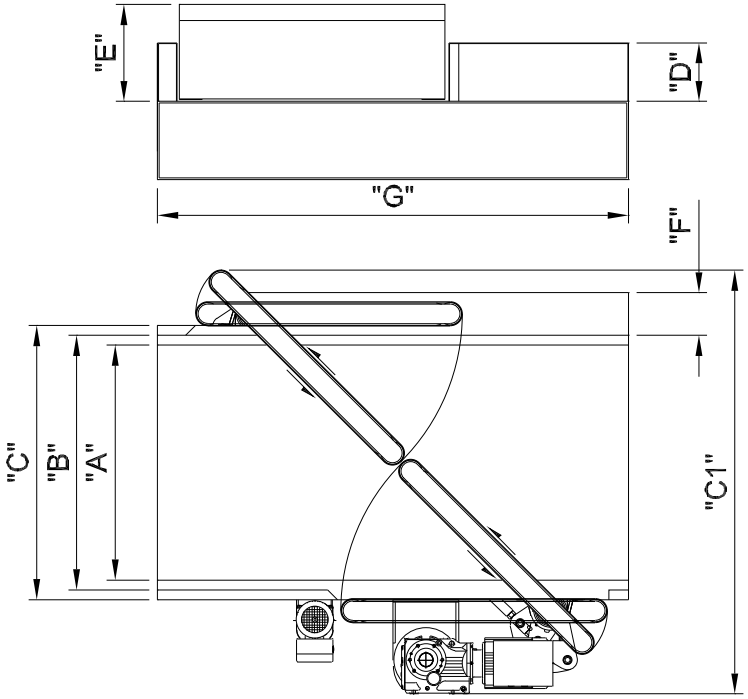


| HORIZONTAL SORTATION DEVICE SPECIFICATIONS | |
|---|---|
| **Description** | **G&S Standards** |
| **Dimensions** | |
| Belt Width ("A") | 36" (914mm) |
| Between Frame Width ("B") | 39" (991mm) |
| Overall Frame Width ("C") | 42" (1067mm) |
| Overall Width ("C1") | 65" (1651mm) |
| Side Guard Height ("D") | 9" (229mm), 21" (533mm) |
| Paddle Height ("E") | 14" (356mm) |
| Spill Plate Length ("F") | 7" (178mm) minimum |
| Conveyor Length ("G") | 72" (1829mm) |
| **Specifications** | |
| Speed (Main Belt) | 90 ft/min (27.43 m/min) to 240 ft/min (73.15 m/min) |
| Speed (Paddle Belt) | Proportional to main belt |
| Load Capacity (Live Load) | 40 lbs/ft (59.52 kg/m) maximum |
| Baggage Rate (bag/hr) | 1060-1850 |

| Drive Options | | |
|---|---|---|
| Standard | | |
| Application | Make | Model |
| 90 Deg. Reducer | SEW Eurodrive | SA - Hollow Shaft<br>ST - TorqLOC |

| Belting Options | | | | |
|---|---|---|---|---|
| Standard | | | Optional | |
| Application | Make | Model | Make | Model |
| Main Belt | Nitta | BLC-18DKF2 | Ammeraal Beltech | EX 10/2 0+00 AS FR |
| | | | Habasit | NNT-10ESBU |
| | | | Siegling America | E12/2 V1/V1 M-FR Black |
| Paddle Belt | Nitta | BLRB-16A | | |
| | | | | |
| | | | | |

# HORIZONTAL SORTATION DEVICE (HSD)

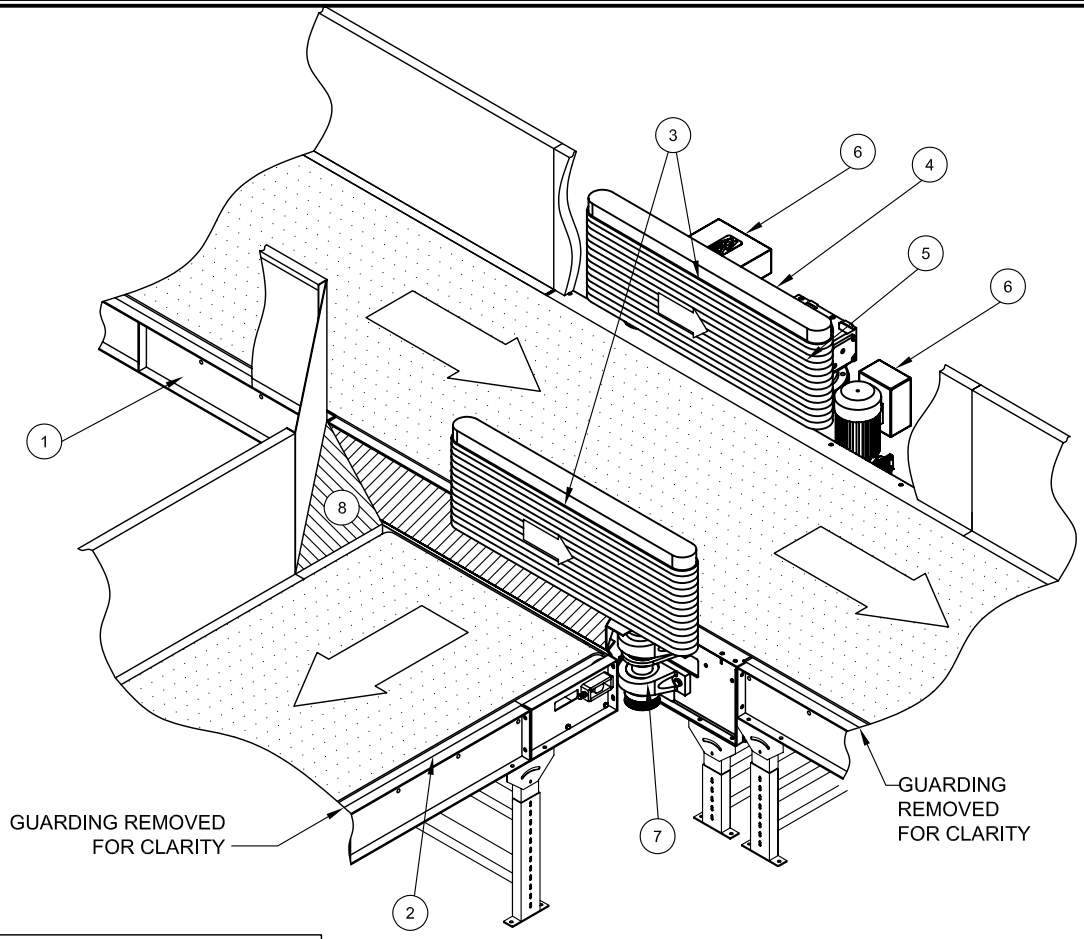


TYPICAL ISOMETRIC VIEW

RIGHT-HAND UNIT SHOWN

| ITEM | COMPONENT |
|---|---|
| 1 | Mainline Conveyor |
| 2 | Divert Line Conveyor |
| 3 | HSD "Paddles" |
| 4 | HSD Belt Covers |
| 5 | HSD "Paddle" Belt (TYP) |
| 6 | Motor/Gearbox Assembly |
| 7 | HSD "Paddle" Arm Mechanism |
| 8 | Lead-in High Side/Spill Plate |

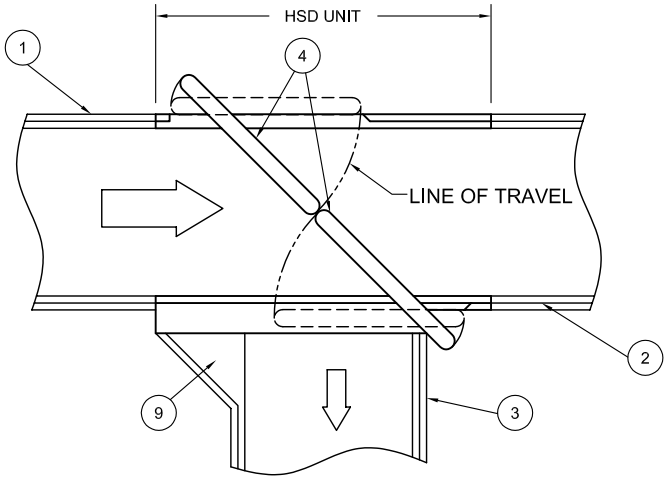


TYPICAL ELEVATION VIEW

RIGHT-HAND UNIT SHOWN

# Vertical Sortation Device (VSD)

## ADVANTAGES:

- **Available for belt widths 24” to 36” (610mm -914mm)**
- **Quick cycle times compatible with belt speeds ranging from 90 - 240 FPM (27.43 - 73.15 m/min)**
- **Two models available**
- **Effective and efficient sortation solution**

## OVERVIEW:

The G&S Vertical Sortation Device (VSD) is a gentle, effective means of diverting or merging baggage in airport baggage handling systems. Typically preceded by one or more queue conveyors that control flow and optimize baggage spacing, the VSD redirects baggage in a vertical orientation, thus accommodating systems where space saving solutions are required.

Used as a vertical *sorter*, the VSD transfers baggage from one input conveyor to one of two adjacent vertically aligned outfeed conveyors that are positioned vertically one above another. For vertical *merging*, the VSD integrates the flow from two conveyors, which are aligned vertically one above the other, to a single outfeed conveyor.

Baggage is redirected by alternating the positions of two of three conveyors that are designed to pivot concurrently in opposing directions. When baggage is routed to or from the upper line, the two pivoting conveyors align together, providing a direct path between the two connecting conveyors. When baggage is redirected to or from the lower line, one conveyor aligns itself with a fixed conveyor, and the second is pivoted up out of the way, providing a clear route between the two adjacent conveyors.

Each conveyor is capable of redirecting baggage of varying sizes as large as 120 pounds (54.43kg), including baggage tubs and golf clubs.

Quick cycle times are accomplished by counter-balancing one lightweight conveyor against the other, minimizing physical inertia, and producing a smooth and efficient actuating motion. As a result, this simple design is capable of cycle times of 0.6 seconds, translating to a capacity of 40 bags per minute (2260 bags per hour) running at 320 feet per minute (97.54 m/min) with 96” (2438mm”) front-to-front baggage gaps.

To better accommodate the varying needs of airport configurations and capacities, G&S Airport Conveyor offers the Vertical Sortation Device in two models:

- **VSD-1450** – standard design for use on systems requiring a baggage flow of 1480 bags per hour or less.
- **VSD-2200** – high-speed design capable of 2260 bags per hour.

### GENERAL

Consisting of a structural outer frame, one fixed and two pivoting paddle conveyors, power, transmission, and cycling components, and protective guarding to ensure safe operation, each unit is transported from the factory fully tested and assembled and ready to install.

Each conveyor belt is *driven* with a single synchronous belt and sprocket configuration that is powered by a dedicated drive coupled with a variable frequency drive (VFD). The result is individually powered queue conveyors that assist in baggage tracking and ensure baggage is transferred effectively.

The pivoting conveyors *cycle up and down* using a simple actuator / connecting arm mechanism that is controlled using inductive proximity switches that ensures the paddle extends and retracts for repeated and reliable operations. The cycling mechanism is powered by a dedicated gear motor and is combined with a variable frequency drive (VFD), providing full adjustment of acceleration, deceleration, and cycle rates on the actuating mechanism. This results in a simple and reliable system that eliminates the need for any clutch / brake modules.

### CONTROLS

Each VSD is equipped with its own electrical control panel, functioning as a stand-alone subsystem with its own integrated controls. This approach simplifies overall system controls and requires only feed power supply and I/O signals from the Baggage Handling System to trigger each cycle.

Safeguards are built into the VSD through the use of strategically placed photo eyes that detect baggage at different stages along the unit. These photo eyes monitor baggage travel and ensure that baggage is not present when the pivoting conveyors are mid-cycle and detect any baggage jams immediately.

### FRAME

- Robust rigid support structure
- Strategically placed attachment points for all components

Constructed using standard structural mild steel sections, the frame is welded in quality controlled jigs and fixtures to guarantee accurate component alignment.
The framework provides a perfect support structure for accurately locating bearings, drive and cycling components. Motor mounts are conveniently positioned in protected, yet accessible locations, while drive components and take-ups are within reach for regular maintenance and adjustments. The structure design also incorporates attachment points for the protective guarding measures, as well as a gantry system to accommodate maintenance on both the conveyors and the cycling mechanism.

All components of the framework structure are painted with a protective, rust-inhibiting grey finish.

### GUARDING

- Lightweight, removable and see-through
- Protection from drive components and pinch-points

By providing removable mesh-covered guard panels on each side of the VSD frame, safety to operators and maintenance personnel is ensured, without limiting visibility of regular device operations. These panels include safety switches that halt system operations when the panels are dislodged or removed. Further guarding is provided over synchronous drive belts and pinch points between the pivoting and fixed conveyors.

### PADDLE CONVEYORS

- Lightweight, minimal design
- 12 gauge side guards, 9” (229mm) high

Each conveyor unit comes complete with a 4” (102mm) diameter roller assembly that is located between precision, self-aligning ball bearings. Power is transmitted to the conveyor belting through the drive roller and oversized shaft assembly, which acts as both the bearing and conveyor pivot point on the frame. The simple, lightweight design of the paddle conveyors minimizes component quantities and is easy to maintain.

### CONVEYOR BELTING:

- Black, longitudinally ribbed, 2-ply woven polyester

Belting is joined to form a continuous loop using belt lacing and flexible, nylon-covered steel-cable joiner pins.

### MOTOR / REDUCER:

- SEW Eurodrive constant speed gear motors
- Variable Frequency Drive

All systems are powered by a direct drive motor / gearbox assembly which is selected for reliability, low-noise characteristics, and ease of maintenance. Complimented with a variable frequency drive (VFD), this combination provides full adjustment of cycle rates and conveyor speed, acceleration, and deceleration. This eliminates the need for a clutch / brake module in any of the systems, resulting in simple, reliable operation.

# Vertical Sortation Device (VSD)

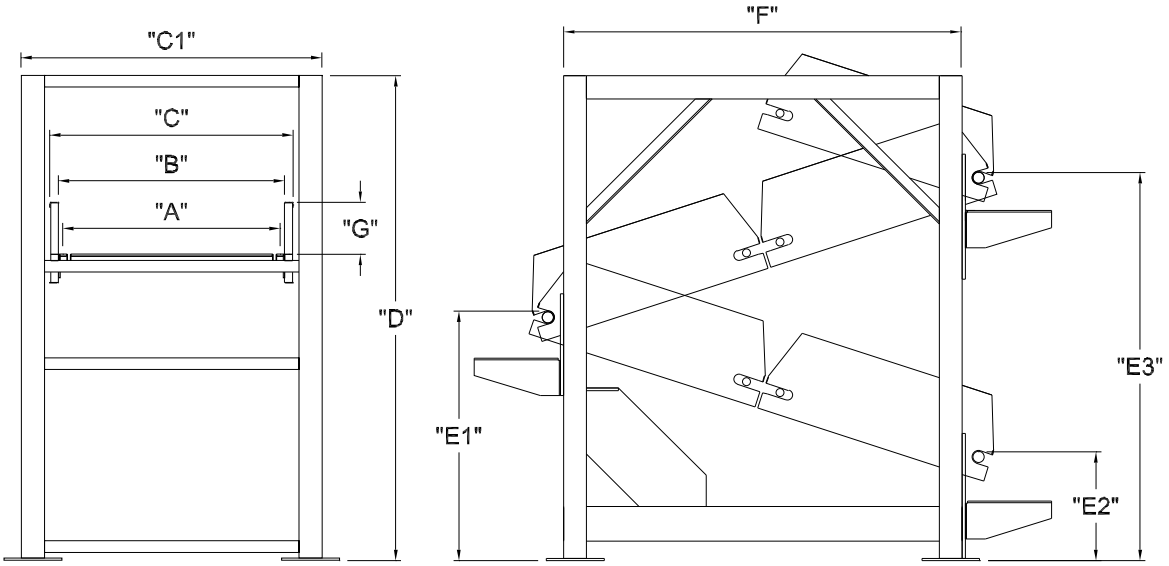


| VERTICAL SORTATION DEVICE SPECIFICATIONS | |
|---|---|
| **Description** | **G&S Standards** |
| **Dimensions** | |
| Belt Width ("A") | 38" (965mm) |
| Between Frame Width ("B") | 39" (991mm) |
| Overall Frame Width ("C") | 42" (1067mm) |
| Overall Steel Frame Width ("C1") | 52" (1321mm) |
| Overall Steel Frame Height ("D") | 83⅞" (2130mm) |
| Infeed Paddle Height to Floor ("E1") | 44¼" (1124mm) |
| Lower Out-feed Paddle Height to Floor ("E2") | 20" (508mm) |
| Upper Out-feed Paddle Height to Floor ("E3") | 68⅜" (1737mm) |
| Conveyor Length ("F") | 68⅞" (1749mm) |
| Side Guard Height ("G") | 9" (229mm) |
| **Rollers** | |
| Head Roller Dia | Ø4" (102mm) |
| Tail Roller Dia | Ø4" (102mm) |
| **Specifications** | |
| Speed (Main Belt) | 90 ft/min (27.43 m/min) to 320 ft/min (97.54 m/min) |
| Speed (Paddle Belts) | Proportional to main belt |
| Load Capacity (Live Load) | 40 lbs/ft (59.52 kg/m) maximum |
| Baggage Rate (bag / hr) | 1450-2200 |

| Drive Options | | |
|---|---|---|
| Standard | | |
| Application | Make | Model |
| 90 Deg. Reducer | SEW Eurodrive | SA - Hollow Shaft<br>ST - TorqLOC |

| Belting Options | | | | |
|---|---|---|---|---|
| Standard | | | Optional | |
| Application | Make | Model | Make | Model |
| Paddle Belt | Nitta | BLRB-16A | Ammeraal Beltech | EX 10/2 0+A32 Black AS FR |
| | | | Habasit | NSL-11ESBV |
| | | | Siegling America | E8/2 U0/V15 LG-FR |

# VERTICAL SORTATION DEVICE (VSD)

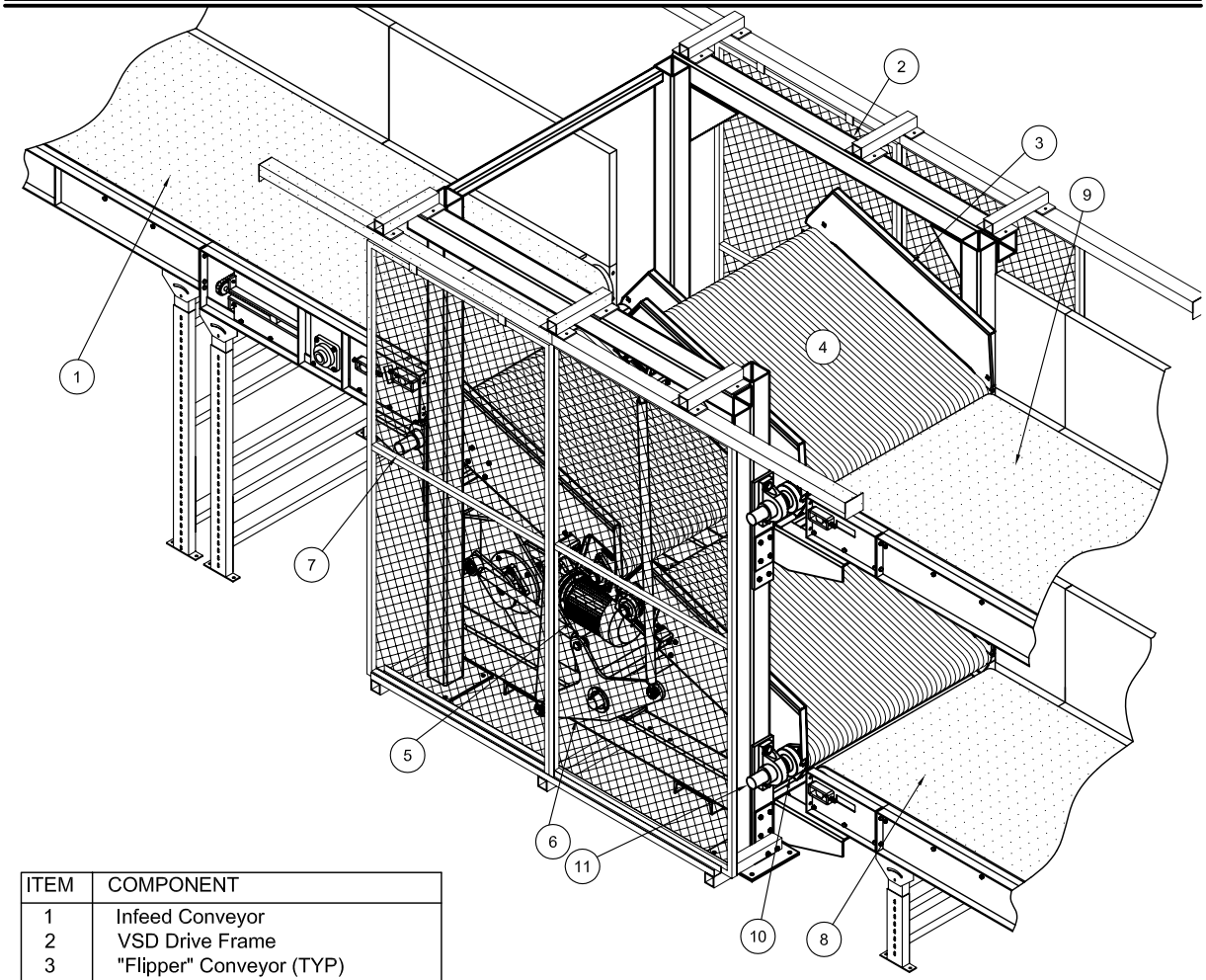


TYPICAL ISOMETRIC VIEW

| ITEM | COMPONENT |
|---|---|
| 1 | Infeed Conveyor |
| 2 | VSD Drive Frame |
| 3 | "Flipper" Conveyor (TYP) |
| 4 | "Flipper" Belt c/w V-Guide (TYP) |
| 5 | Motor/Gearbox (TYP) |
| 6 | Drive Mechanism |
| 7 | Conveyor Mount Bracket |
| 8 | Lower Out-feed Conveyor |
| 9 | Upper Out-feed Conveyor |
| 10 | Bearing (TYP) |
| 11 | Flipper Belt Drive Shaft (Typical 3) (Can be Slave Driven or by Individual Drives) |

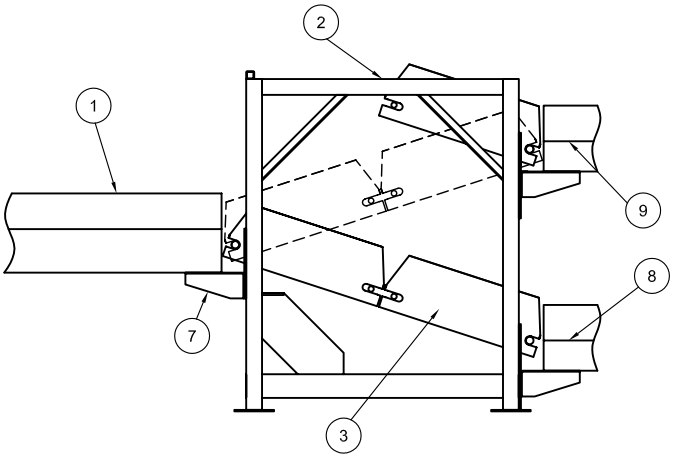


TYPICAL ELEVATION VIEW

# EXAMPLE OF AN EXPLOSIVE DETECTION SYSTEM (EDS)

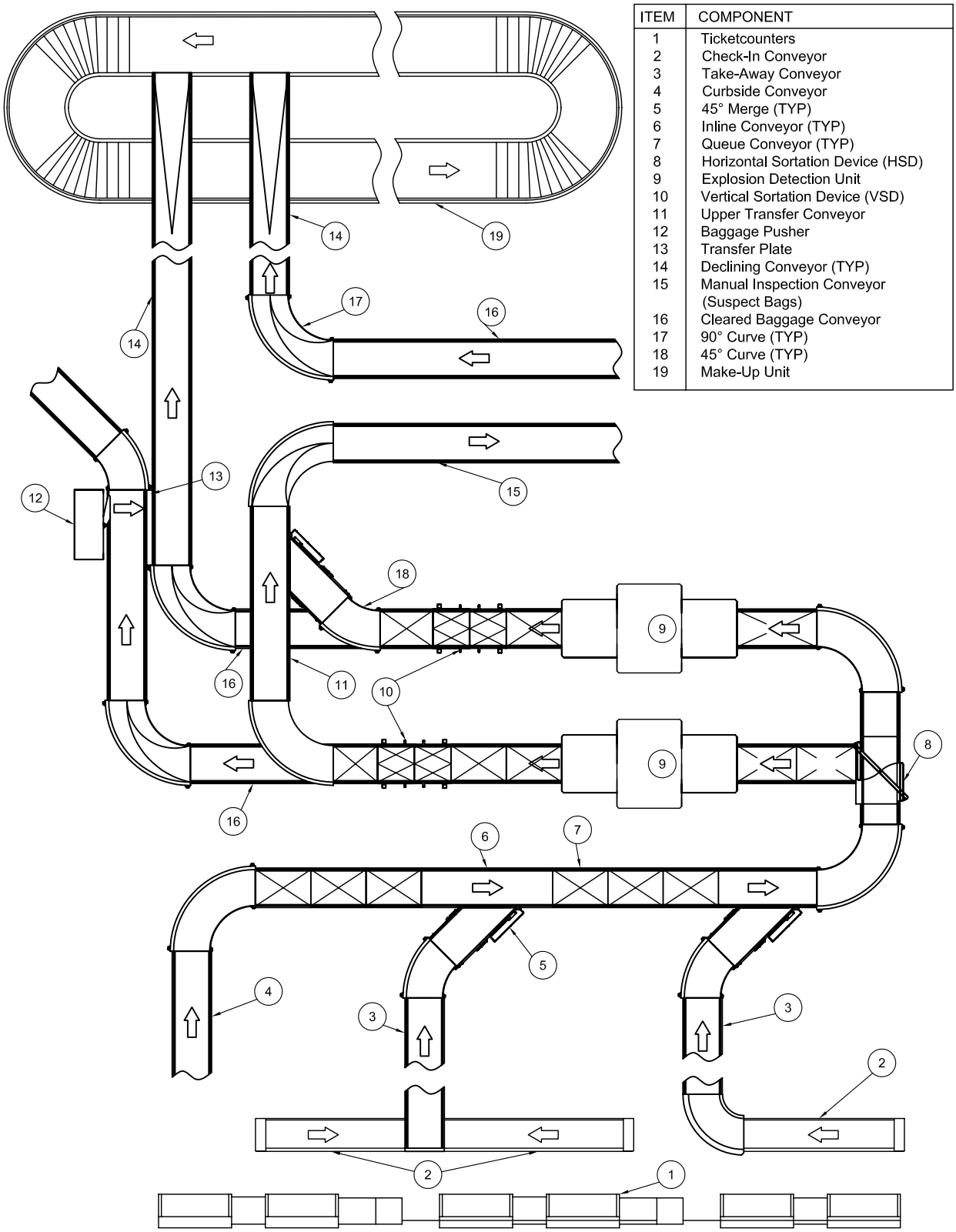


| ITEM | COMPONENT |
|---|---|
| 1 | Ticketcounters |
| 2 | Check-In Conveyor |
| 3 | Take-Away Conveyor |
| 4 | Curbside Conveyor |
| 5 | 45° Merge (TYP) |
| 6 | Inline Conveyor (TYP) |
| 7 | Queue Conveyor (TYP) |
| 8 | Horizontal Sortation Device (HSD) |
| 9 | Explosion Detection Unit |
| 10 | Vertical Sortation Device (VSD) |
| 11 | Upper Transfer Conveyor |
| 12 | Baggage Pusher |
| 13 | Transfer Plate |
| 14 | Declining Conveyor (TYP) |
| 15 | Manual Inspection Conveyor (Suspect Bags) |
| 16 | Cleared Baggage Conveyor |
| 17 | 90° Curve (TYP) |
| 18 | 45° Curve (TYP) |
| 19 | Make-Up Unit |

# Heavy Duty Pusher

## ADVANTAGES

- **Features a space-saving 45° sweep pusher blade**
- **Capable of diverting 80 items per minute (4800 items per hour)**
- **Harmonically balanced to ensure smooth actuation**
- **Simple, rugged design**

## OVERVIEW

The Heavy Duty Pusher (HDP) is a simple and compact diverting device that can be used to transfer baggage directly from one conveyor line to another, or indirectly using a baggage chute.

The automatically actuated paddle is designed to push baggage as large as 120 pounds (54.43kg) and of varying sizes, including baggage tubs and golf clubs. The uniquely shaped paddle is designed with shock absorbing materials and a spring dampening system that provides a smooth, gentle diverting action.

harmonically balanced device ensures a smooth actuation throughout the entire divert cycle, virtually eliminating vibration. This allows that the unit be mounted on support structures either fixed to the floor or suspended from above.

Driven by a direct-drive motor, and controlled by a variable frequency drive that ensures smooth acceleration and deceleration, the HDP requires minimal regular maintenance.

Installed as a stand-alone subsystem, the HDP is easily integrated into the overall control system.

This rugged, heavy-duty sortation pusher is constructed and installed to provide a service life that exceeds industry standards.

G&S Airport Conveyor utilizes the Sandvik Heavy Duty Pusher ~ Model HDP-61-80.

### INSTALLATION

G&S Airport Conveyor site representatives have extensive history using power turn conveyors, and are experts at installing and maintaining this equipment.

# Queue Conveyor

## ADVANTAGES:

- **Ideal for indexing, queuing, or separating baggage flow**
- **Simple, modular design capable of continuous start / stop operation**

  **Belt widths available from 24" (610mm) – 48" (1219mm) wide**
- **Standard Lengths: 36" (914mm), 41" (1041mm), 54" (1372mm), 60" (1524mm), 66" (1676mm), 72" (1829mm), or 84" (2134mm)**
- **Belt Speeds: 90 – 350 feet per minute (27.43 – 106.68 m/min)**

## OVERVIEW:

The queue conveyor is ideal for indexing, queuing, or separating baggage in systems that require flow management. This self-contained, independent conveyor can either be placed in-line throughout merging and sortation systems, or can stand alone as a short conveyor.

The simple, modular design allows the queue conveyor to be manufactured in a number of standard lengths, or customized to meet site-specific needs. All components are easily accessible for regular maintenance and adjustments.

Durably manufactured, this resilient unit is capable of withstanding continuous start / stop applications, and meets or exceeds all industry standards.

## GENERAL:

- Simple modular design, utilizing minimal components
- Removable flank plates allow easy access to rollers and components for maintenance

The basic construction of the queue conveyor is composed of a frame, side guards, and three rollers. To ensure belt tracking over such a short length, the rollers and slider bed are fabricated with a guide groove along the center of the conveyor to accommodate a V-guide belt, which is affixed to the underside of the conveyor belt.

All mild steel components are painted or powder coated in a machine grey color, resulting in exceptional durability and appearance.

The unit is fashioned with three rollers: the *drive*, *tail*, and *take-up* pulley. The drive and tail rollers are crowned, 7" (178mm) diameter pulleys, complete with 3/8" (10mm) lagging and a machined center V-guide groove. The take-up pulley is 4" (102mm) in diameter. All rollers are situated between precision, self-aligning ball bearings, and are supplied with jacking bolts to accommodate belt tracking.

### CONVEYOR BELTING:

- Black, longitudinally ribbed surface, 2-ply woven polyester, complete with A-section V-guide along center and inside face.

Belting is joined to form a continuous loop using mechanical lacing and flexible, nylon-covered steel cable joiner pins.

Belting options are listed on page 5.4.4.

### BEARINGS:

- Self-aligning, pre-lubricated and anti-friction bearings.
- Rated: L-10 life of 70,000 hours.

### DRIVE

G&S Airport Conveyor uses integral 90° motor / gearbox reducers; optional drive methods are available.

# Queue Conveyor

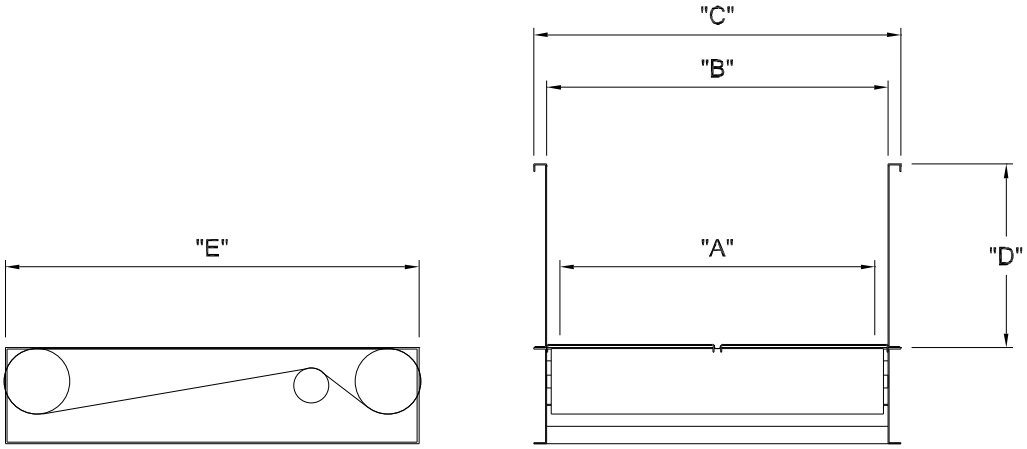


| QUEUE CONVEYOR SPECIFICATIONS | |
|---|---|
| **Description** | **G&S Standards** |
| **Dimensions** | |
| Belt Width ( “A” ) | 24” (610mm), 30” (762mm), 33” (838mm), 34” (864mm), 36” (914mm), 48” (1219mm) |
| Between Frame Width (“B”) | 27” (686mm), 33” (838mm), 36” (914mm), 37” (940mm), 39” (991mm), 51” (1295mm) |
| Overall Width (“C”) | 30” (762mm), 36” (914mm), 39” (991mm), 40” (1016mm), 42” (1067mm), 54” (1372mm) |
| Side Guard Height (“D”) | 0” (0mm), 9” (229mm), 12” (305mm), 21” (533mm) |
| Conveyor Length (“E”) | 36” (914mm), 41” (1041mm), 54” (1372mm), 60” (1524mm), 66” (1676mm, 72” (1829mm), 78” (1981mm), 84” (2134mm) |
| **Rollers** | |
| Drive Roller Dia | Ø7¾” (197mm) |
| Take-up Roller Dia | Ø4” (102mm) |
| Tail Roller Dia | Ø7¾” (197mm) |
| **Specifications** | |
| Speed | 90-350 ft/min (27.43-106.68 m/min) –as per specs |
| Load Capacity (Live Load) | 40 lbs/ft (59.52 kgs/m) maximum |

| Drive Options | | | | |
|---|---|---|---|---|
| Application | Standard | | Optional | |
| | Make | Model | Make | Model |
| 90º Reducer | SEW Eurodrive | ST – TorqLOC | Morse | |
| | | SA – Hollow Shaft | Dodge | Ti-Gear |
| Motorized Pulley | Van Der Graff | | BDL | DuraDrive |
| | | | Interroll | |
| Belt Drive | | | Baldor (motor) | |
| | | | Reliance (motor) | |
| | | | Dodge ( speed reducer) | TXT |

| Belting Options | | | | |
|---|---|---|---|---|
| Application | Standard | | Optional | |
| | Make | Model | Make | Model |
| Transport; Level -23º | Nitta | BLRB-16A | Ammeraal Beltech | EX 10/2 0+A32 Black AS FR |
| | | | Habasit | NSL-11ESBV |
| | | | Siegling America | E8/2 U0/V15 LG-FR |

***Refer to motor manifest for specific motor, reducer, and belting selection

# TYPICAL APPLICATION OF A QUEUE CONVEYOR

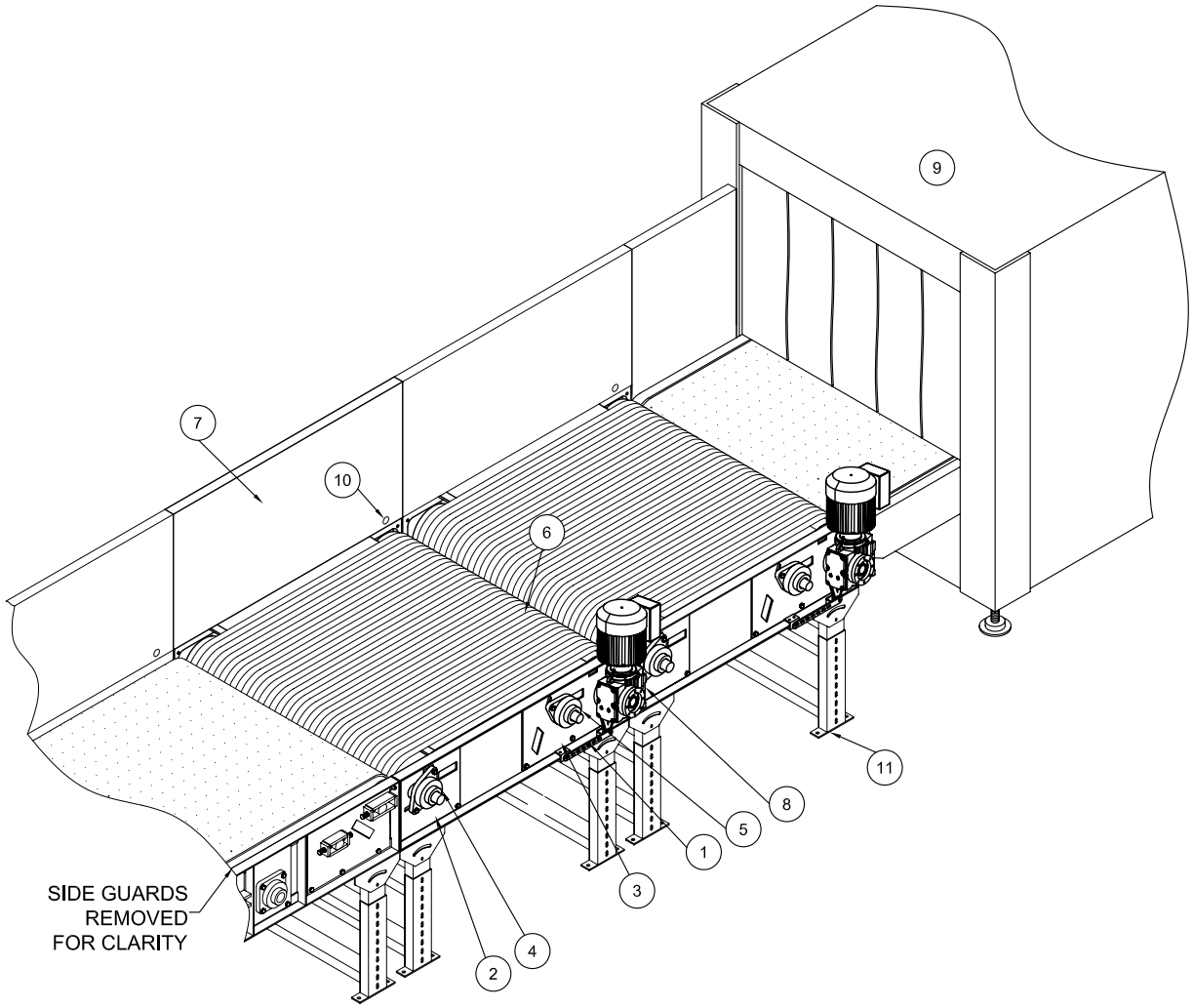


| ITEM | COMPONENTS |
|---|---|
| 1 | Queue Frame |
| 2 | Tail Flank Plate |
| 3 | Head Flank Plate |
| 4 | Tail Roller w/ Bearing |
| 5 | Idler Roller w/ Bearing |
| 6 | Conveyor Belt c/w A-Section V-Guide (TYP) |
| 7 | Side Guard |
| 8 | Motor/Gearbox Shaft Mount Assembly on Head Roller<br>(Motor/Gearbox Shown for Visual Purposes)<br>(See Break-out Drawings for Drive Options) |
| 9 | Explosion Detection Unit (By Others) |
| 10 | Photoelectric Controls (TYP) |
| 11 | Typical Support Legs |

# EXPLODED VIEW OF A QUEUE CONVEYOR C/W MOTOR/GEARBOX

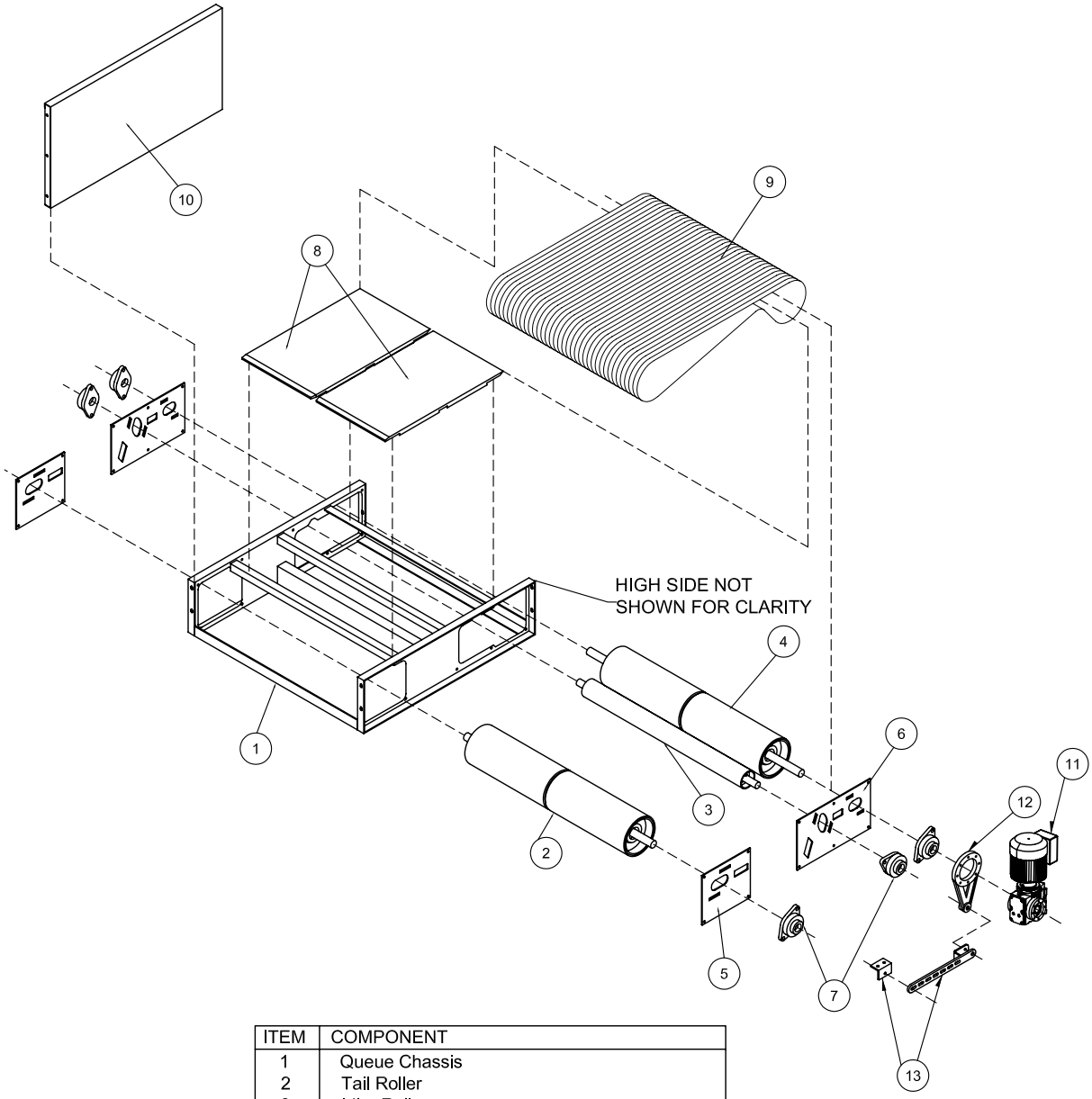


| ITEM | COMPONENT |
|---|---|
| 1 | Queue Chassis |
| 2 | Tail Roller |
| 3 | Idler Roller |
| 4 | Head Roller |
| 5 | Tail Flank Plate |
| 6 | Head Flank Plate |
| 7 | Bearings |
| 8 | Deckpan |
| 9 | Conveyor Belt (w/ A-section V-guide) |
| 10 | High Side (TYP-Both Sides) |
| 11 | Motor/Gearbox Shaft Mount Assembly (TYP) |
| 12 | Torque Arm |
| 13 | Torque Arm Bracket |

# EXPLODED VIEW OF A QUEUE CONVEYOR C/W MOTORIZED PULLEY

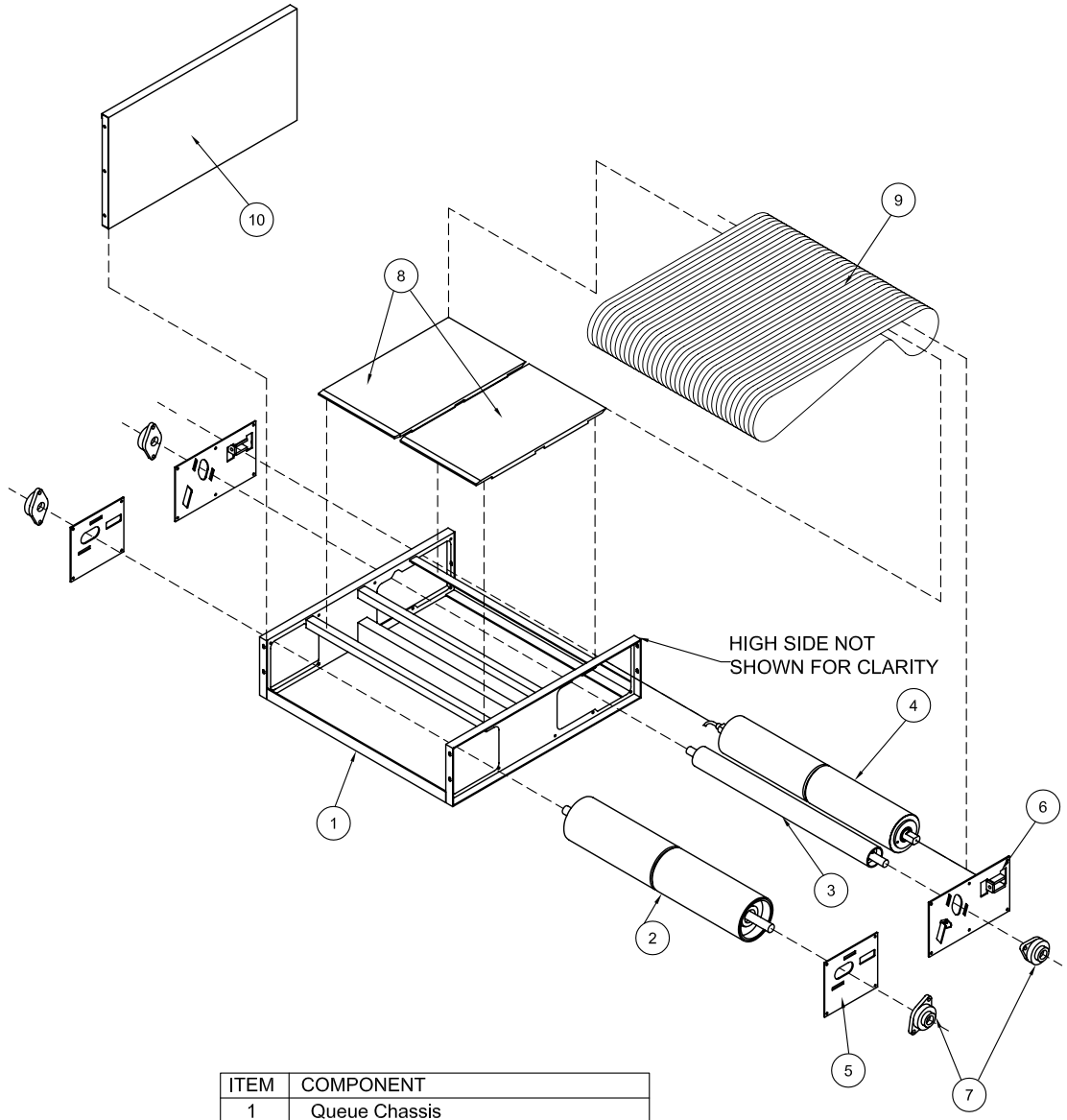


| ITEM | COMPONENT |
|---|---|
| 1 | Queue Chassis |
| 2 | Tail Roller |
| 3 | Idler Roller |
| 4 | Motorized Pulley |
| 5 | Tail Flank Plate |
| 6 | Head Flank Plate |
| 7 | Bearings |
| 8 | Deckpan |
| 9 | Conveyor Belt (w/ A-section V-guide) |
| 10 | High Side ( TYP-Both Sides) |

# 45° MERGE CONVEYOR

## ADVANTAGES:

- **Seamless, Efficient Baggage Merging**
- **Available for All Standard Widths**
- **Queue Conveyor Capabilities**
- **High Speed Induction**
- **Low Maintenance**
- **Rugged Construction**

## OVERVIEW:

The 45° merge conveyor is ideal for seamless, efficient merging of baggage from one conveyor to another. This is the preferred method of merging baggage flow to right angle junctions or other means of merging. The 45° convergence angle facilitates effective baggage transfer, minimizing baggage from jamming. This is effectively accomplished by cascading baggage onto the adjacent conveyor at a high induction speed.

The 45° merge conveyor can be utilized as a queue conveyor by installing selective control equipment, providing effective start / stop and priority-flow functions.

G&S Airport Conveyor utilizes Angle-Flo® 45° merge conveyor, manufactured by Portec, and the TS4200, manufactured by Transnorm System Inc.

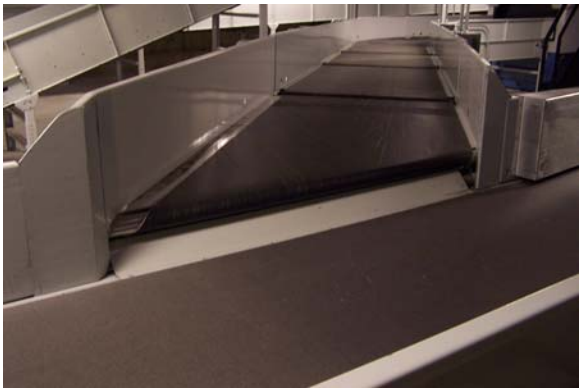

### DRIVE

G&S Airport Conveyor drives all 45° merge conveyors using integral motor / gearbox reducers; optional drive methods are available.

Operational start / stop cycling is accomplished by utilizing a variable frequency device which provides full adjustment of cycle rates, as well as controlled acceleration and deceleration. This simple, reliable device eliminates the need for a clutch / brake module.

### INSTALLATION

All G&S Airport Conveyor site representatives have extensive installation experience with 45° merge conveyors and are experts in the installation and maintenance of this equipment.

# Merge Conveyor

## ADVANTAGES:

- **Two merging solutions**
- **Effective, efficient baggage transfer**
- **Simple, economical design**

## OVERVIEW:

Merge conveyors are ideal for integrating baggage flows from two parallel conveyors lines to one combined flow. They can also be used as a loading device when placed adjacent to a pallet loop conveyor, deflecting baggage on to the make-up device.

G&S Airport Conveyor offers two merge conveyor solutions for combining baggage flows:

- Two-Belt Merge Conveyor
- Wide Belt Merge Conveyor

Both solutions utilize a wide-faced, low-friction static deflecting surface that is fixed above the conveyor belt, braced to withstand normal operating forces, yet easy to remove in case of baggage jams. Baggage flow is gently guided across the conveying surfaces at an angle typically no greater than 15° from centreline.

### TWO-BELT MERGE CONVEYOR

The two-belt merge is typically used where two independent conveyor lines run parallel to each other, or where a feed conveyor runs adjacent to a pallet loop conveyor, and baggage flow is deflected from one to the other.

This merging solution is typically installed with a minimum distance between frames, preferably 6-inches, and a minimum elevation differential of 4-inches between conveying surfaces. A low-friction spill plate fixed between the two conveyors facilitates baggage transfer over the gap and elevation change.

### WIDE-BELT MERGE CONVEYOR

The wide-belt merge conveyor is a stand-alone unit that is constructed as an extra-wide conveying surface for baggage to deflect across. This unit is typically wide enough to accommodate two adjacent in-feed conveyors, with a minimum 6” (152mm) between frames, and a subsequent standard width out-feed conveyor.

Baggage is deflected across a continuously flowing, level transfer surface merging two conveyor baggage flows into one. Baggage jams are minimized as the dead space introduced by spill plates is eliminated, resulting in an efficient, effective baggage merging solution.

### DEFLECTOR

- Reinforced, 12-gauge mild steel design
- Adjustable, removable design
- Optional, low friction, UHMWPE deflector surface.

This simple, yet effective deflector design is available in standard heights and can be manufactured to accommodate site conditions. Complimented with rigid supports that are fully adjustable, this device can be fine-tuned to optimize regular operations.

# Merge Conveyor

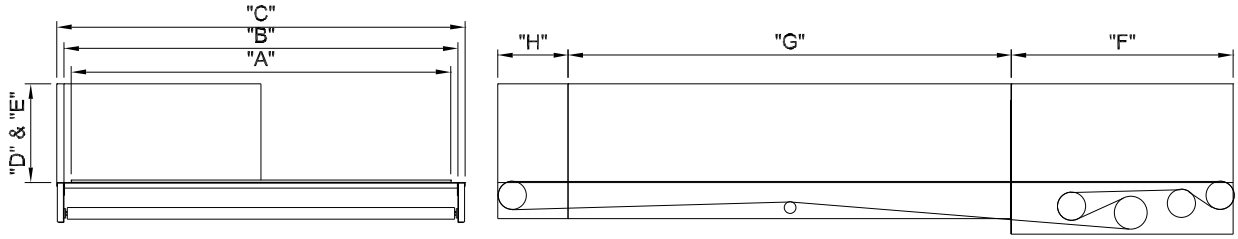


| WIDE-BELT MERGE CONVEYOR SPECIFICATIONS | |
|---|---|
| **Description** | **G&S Standards** |
| **Dimensions** | |
| Belt Width ("A") * | 72" (1829mm), 78" (1981mm), 84" (2134mm), 108" (2743mm) |
| Between Frame Width ("B") | 75" (1905mm), 81" (2057mm), 87" (2210mm), 111" (2819mm) |
| Overall Width ("C") | 78" (1981mm), 84" (2134mm), 90" (2286mm), 114" (2896mm) |
| Side Guard Height ("D") | 9" (229mm), 12" (305mm), 21" (533mm) |
| Baggage Deflector Height ("E") | 9" (229mm), 12" (305mm), 21" (533mm) |
| Drive Module Length ("F") | 3'-11¼" (1200mm) |
| Standard Module Length ("G") | 7'-10½" (2400mm) |
| Tail Module Length ("H") | 1'-3" (381mm) |
| **Rollers** | |
| Drive Roller Dia (lagged) | Ø7? " (194mm) |
| O/S Drive Roller Dia (lagged) | Ø8½" (216mm) |
| Take-up Roller Dia | Ø6" (152mm) |
| Head Roller Dia | Ø6" (152mm) |
| Tail Roller Dia | Ø6" (152mm) |
| **Specifications** | |
| Speed | As per customer |
| Load Capacity (Live Load) | 40 lbs/ft (59.53 kgs/m) maximum |

*Other belt widths can be manufactured to accommodate site conditions

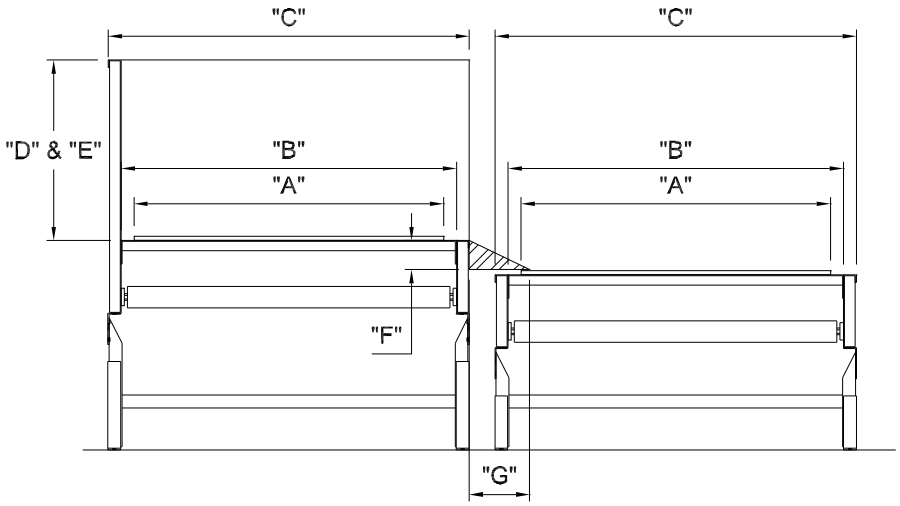


| TWO-BELT MERGE CONVEYOR SPECIFICATIONS | |
|---|---|
| **Description** | **G&S Standards** |
| **Dimensions** | |
| Belt Width ("A") | 30" (762mm), 33" (838mm), 36" (914mm), 48" (1219mm) |
| Between Frame Width ("B") | 33"(838mm), 36" (914mm), 39" (991mm), 51" (1295mm) |
| Overall Width ("C") | 36" (914mm), 39" (991mm), 42" (1067mm), 54" (1372mm) |
| Side Guard Height ("D") | 9" (229mm), 21" (533mm) |
| Baggage Deflector Height ("E") | 9" (229mm), 21" (533mm) |
| Center Transition Plate Height ("F") | 4" (102mm) |
| Center Transition Plate Length ("G") | 6" (152mm) |

| Belting Options | | | | |
|---|---|---|---|---|
| Application | Standard | | Optional | |
| | Make | Model | Make | Model |
| All | Nitta | BLC-18DKF2 | Ammeraal Beltech | EX 10/2 0+00 AS FR |
| | | | Habasit | NNT-10ESBU |
| | | | Siegling America | E12/2 V1/V1 M-FR Black |

| Drive Options | | | | |
|---|---|---|---|---|
| Application | Standard | | Optional | |
| | Make | Model | Make | Model |
| 90 Deg. Reducer | SEW Eurodrive | SA - Hollow Shaft<br>ST - TorqLOC | Morse | |
| | | | Dodge | Ti-Gear |
| Belt Drive | | | Baldor (motor) | |
| | | | Reliance (motor) | |
| | | | Dodge (speed reducer) | TXT |

# WIDE-BELT MERGE CONVEYOR

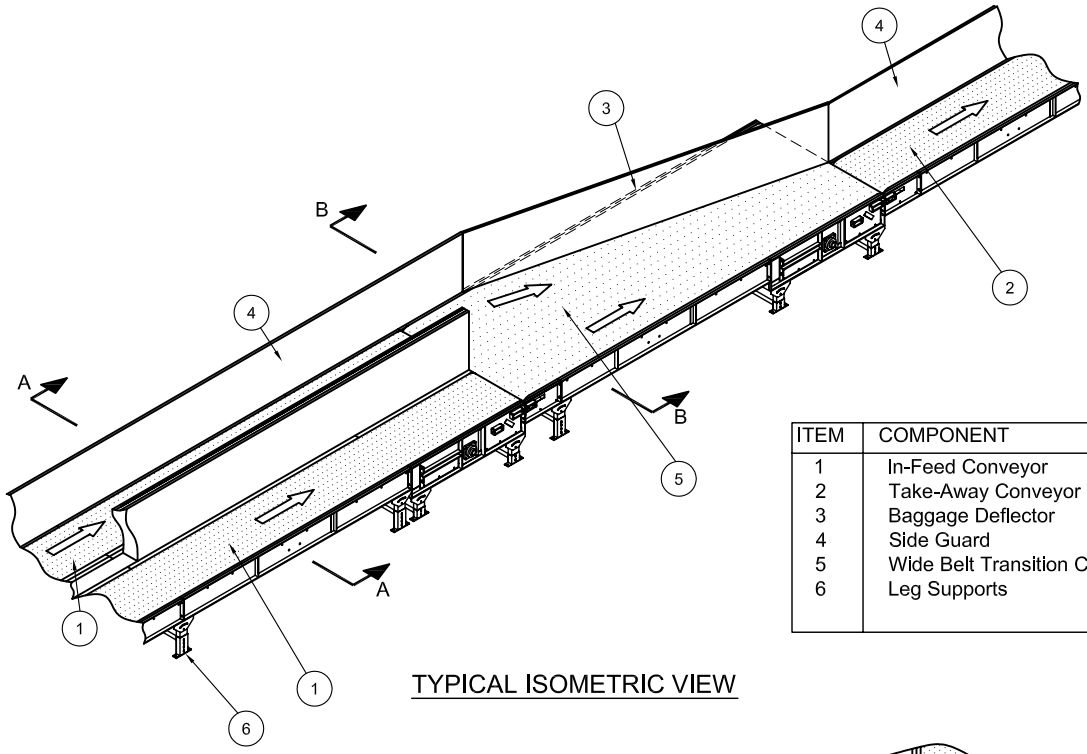


| ITEM | COMPONENT |
|---|---|
| 1 | In-Feed Conveyor |
| 2 | Take-Away Conveyor |
| 3 | Baggage Deflector |
| 4 | Side Guard |
| 5 | Wide Belt Transition Conveyor |
| 6 | Leg Supports |

TYPICAL ISOMETRIC VIEW

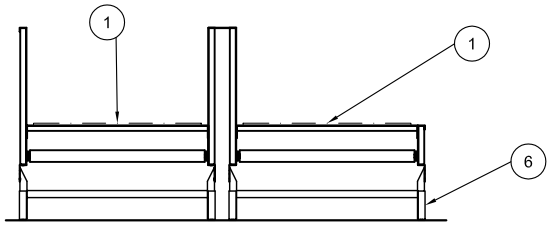


SECTION A-A

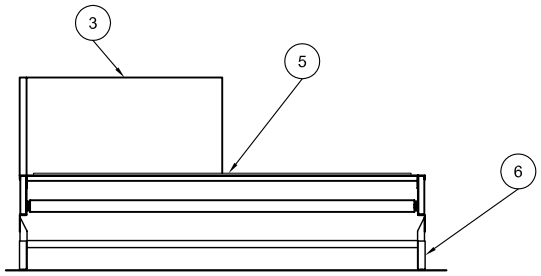


SECTION B-B

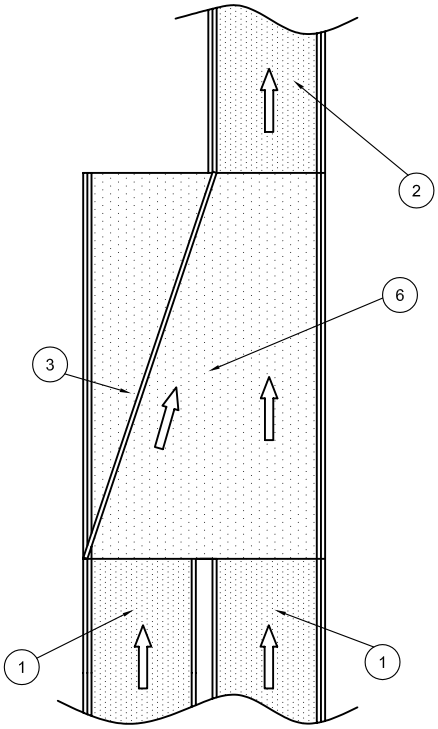


TYPICAL PLAN VIEW

# TWO-BELT MERGE CONVEYOR

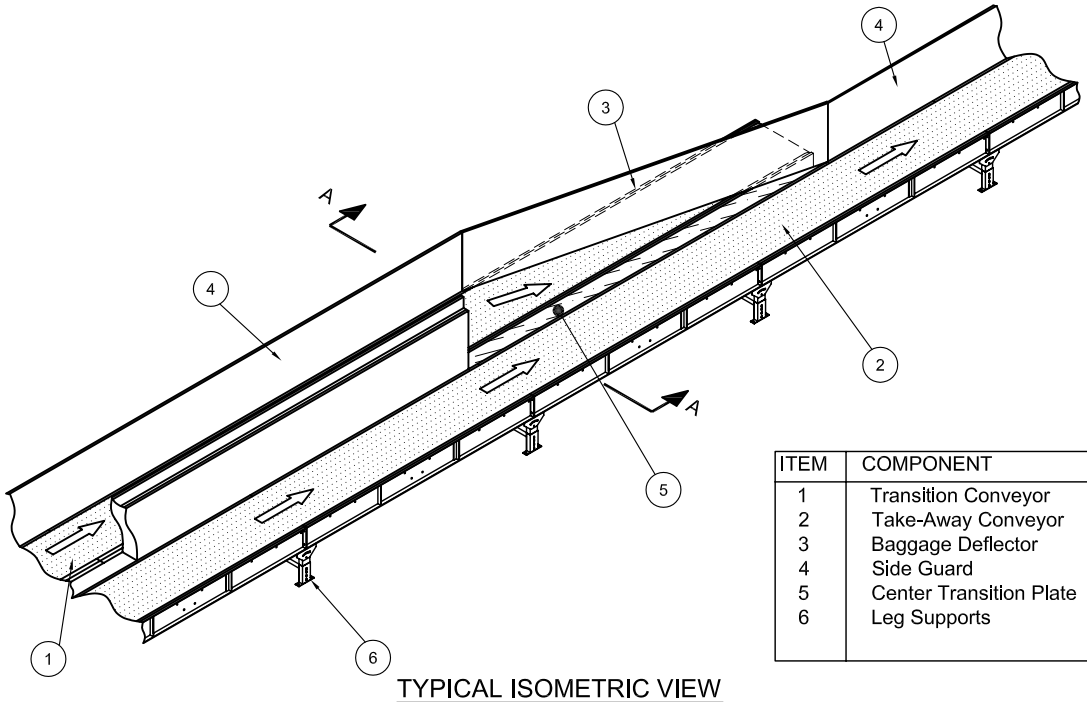


| ITEM | COMPONENT |
|---|---|
| 1 | Transition Conveyor |
| 2 | Take-Away Conveyor |
| 3 | Baggage Deflector |
| 4 | Side Guard |
| 5 | Center Transition Plate |
| 6 | Leg Supports |

TYPICAL ISOMETRIC VIEW

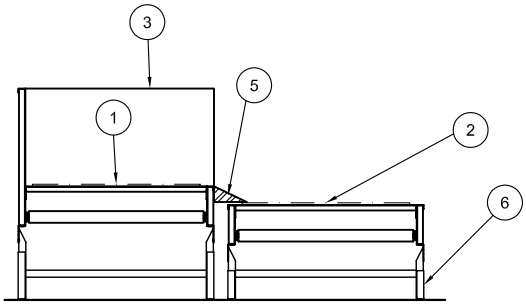


SECTION A-A

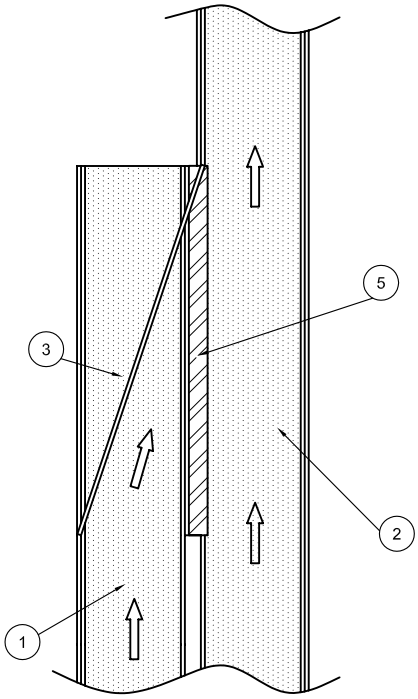


TYPICAL PLAN VIEW

# Powered Baggage Splitter

## ADVANTAGES:

- **Baggage flow control**
- **Redundant system solution**
- **Effective, efficient baggage transfer**
- **Simple, automated design**

## OVERVIEW:

The powered bag deflector is ideal for controlled baggage transfer between adjacent, parallel conveyor lines. This device is ideal where system redundancies are required, allowing operators to redirect flow when system maintenance or repairs are required.

The powered bag deflector is a stand-alone unit that is constructed as an extra-wide conveying surface for baggage to traverse across. This unit is typically wide enough to accommodate two adjacent in-feed and out-feed conveyors positioned 6“ (152mm) apart.

A pivoting deflector arm is used to deflect baggage across a continuously flowing transfer surface using a static or dynamic deflector. The arm itself is manually positioned or mechanically actuated and incorporates three positions which allow baggage to pass through unaffected, or to be redirected to the left or right, as per system requirements.

### STATIC DEFLECTOR

- Reinforced, 12 gauge mild steel design
- 3-position, pivoting design
- Optional, low friction, UHMWPE deflector surface.

Baggage flow is gently guided across the conveying surface using a two-sided, low friction deflector, at an angle typically no greater than 15° from centerline, resulting in efficient and effective baggage diversion

Designs are available in standard heights and can be manufactured to accommodate site conditions. Complimented with an adjustable mechanical actuator, this device can be fine-tuned to optimize regular baggage operations.

### DYNAMIC DEFLECTOR

- Lightweight, rigid design
- Horizontal, powered deflector surface

The pivoting paddle conveyor is built around a heavy-gauge support that is floor mounted, providing the structure that the paddle conveyor pivots around. The lightweight, yet durable, body of the conveyor consists of a reinforced, formed mild steel body capable of withstanding the shock loading experienced when baggage is diverted.

The pivoting paddle conveyor belt is driven with a single synchronous belt and sprocket configuration by means of a drive shaft centered in the pivot support. The conveyor is driven by a dedicated drive that is coupled with a variable frequency drive (VFD) allowing the conveyor’s belt speed to be adjusted to correspond with the main line conveyor, resulting in a flexible, effective baggage transfer.

# Powered Baggage Splitter

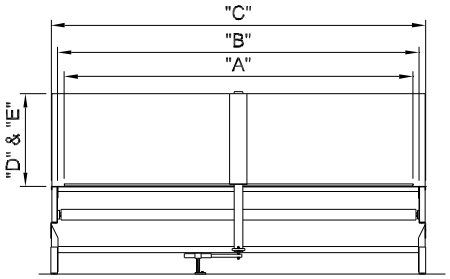


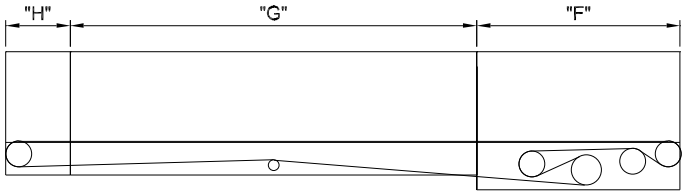


| POWERED BAGGAGE SPLITTER SPECIFICATIONS | |
|---|---|
| **Description** | **G & S Standards** |
| **Dimensions** | |
| Belt Width ("A") | 72" (1829mm), 78" (1981mm), 84" (2134mm), 108" (2743mm) |
| Between Frame Width ("B) | 75" (1905mm), 81" (2057mm), 87" (2210mm), 111" (2819mm) |
| Overall Width ("C) | 78" (1981mm), 84" (2134mm), 90" (2286mm), 114" (2896mm) |
| Side Guard Height ("D) | 9" (229mm), 12" (305mm), 21" (533mm) |
| Powered Baggage Splitter Height ("E") | 12" (305mm), 21" (533mm) |
| Drive Module Length ("F") | 3'-11¼" (1200mm) |
| Standard Module Length ("G") | 7' - 10½" (2400mm) |
| Tail Module Length ("H") | 1'-3" (381mm) |
| **Rollers** | |
| Drive Roller Dia (lagged) | Ø7⅝" (194mm) |
| O/S Drive Roller Dia (lagged) | Ø8½" (216mm) |
| Take-up Roller Dia | Ø6" (152mm) |
| Head Roller Dia | Ø6" (152mm) |
| Tail Roller Dia | Ø6" (152mm) |
| **Actuating Mechanism** | |
| Actuator Type | Electrical or Manual |
| Movement Mechanism | Teardrop plate |
| **Specifications** | |
| Speed | As per customer |
| Load Capacity (Live Load) | 40 lbs/ft (59.63 kgs/m) maximum |

| Drive Options | | | | |
|---|---|---|---|---|
| Application | Standard | | Optional | |
| | Make | Model | Make | Model |
| 90 Deg. Reducer | SEW Eurodrive | SA - Hollow Shaft<br>ST - TorqLOC | Morse | |
| | | | Dodge | Ti-Gear |
| | | | BDL | DuraDrive |
| | | | Interroll | |
| Belt Drive | | | Baldor (motor) | |
| | | | Reliance (motor) | |
| | | | Dodge (speed reducer) | TXT |

| Belting Options | | | | |
|---|---|---|---|---|
| Application | Standard | | Optional | |
| | Make | Model | Make | Model |
| All | Nitta | BLC-18DKF2 | Ammeraal Beltech | EX 10/2 0+00 AS FR |
| | | | Habasit | NNT-10ESBU |
| | | | Siegling America | E12/2 V1/V1 M-FR Black |

# POWERED BAGGAGE SPLITTER

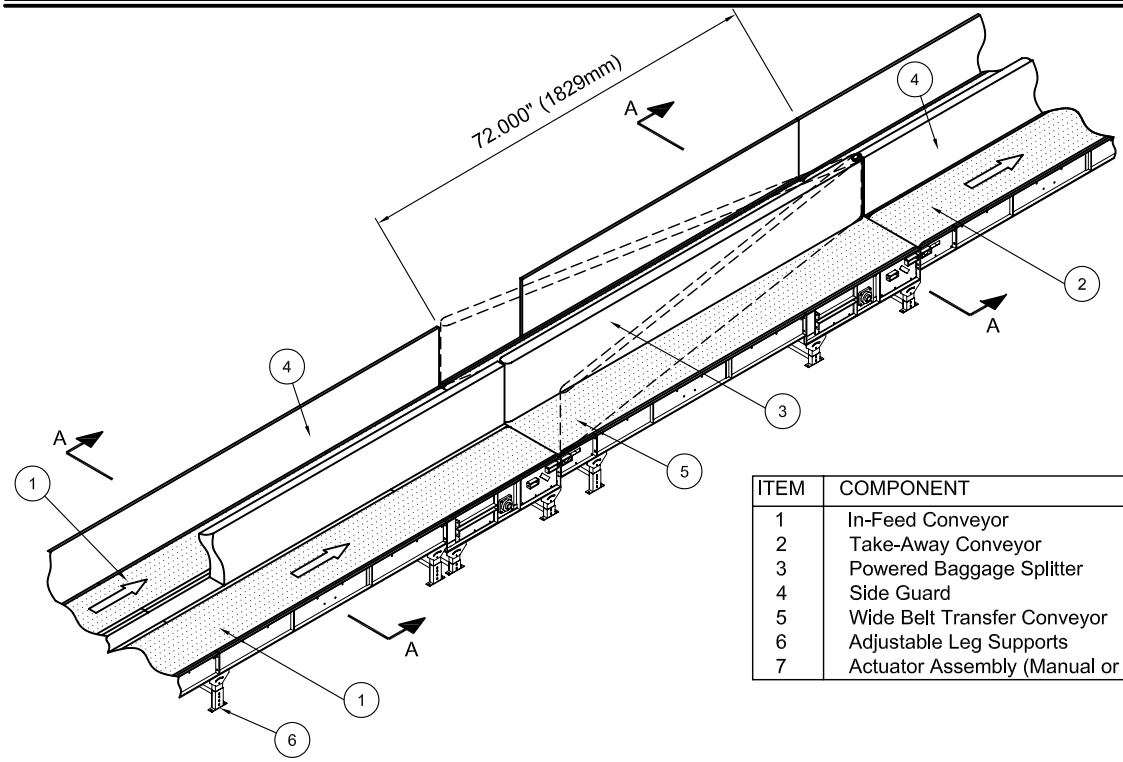


| ITEM | COMPONENT |
|---|---|
| 1 | In-Feed Conveyor |
| 2 | Take-Away Conveyor |
| 3 | Powered Baggage Splitter |
| 4 | Side Guard |
| 5 | Wide Belt Transfer Conveyor |
| 6 | Adjustable Leg Supports |
| 7 | Actuator Assembly (Manual or Motorized) |

TYPICAL ISOMETRIC VIEW

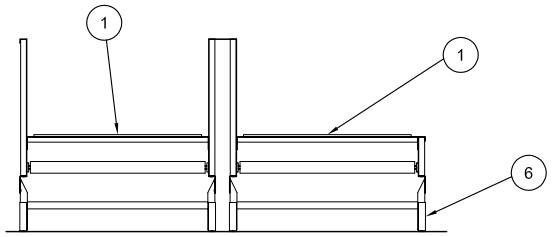


SECTION A-A

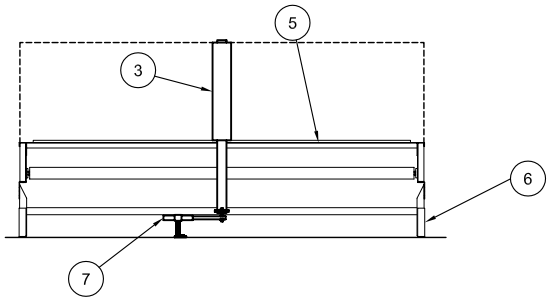


SECTION B-B

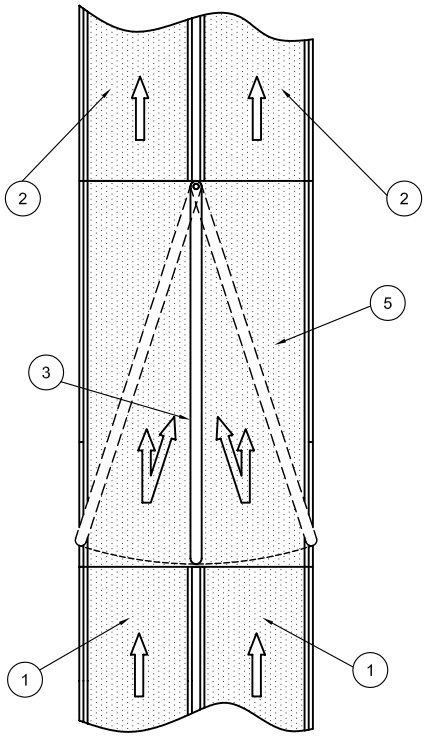


TYPICAL PLAN VIEW

# Tip Chute

## ADVANTAGES

- **Ideal for inserting, merging, and loading baggage onto conveyors from above**
- **Simple, durable design**
- **Available for standard widths**

## OVERVIEW

The tip chute is ideal for re-inserting or merging baggage where one conveyor is positioned vertically above another. It is also suitable for loading baggage make-up devices such as the pallet loop conveyor.

Designed to mount at the end of a standard general transport conveyor drive section, this unit comes complete with tip chute, spill plate, side guards, and counterweights. Each tip chute comes complete with a removable protective safety enclosure over each counterweight mechanism ensuring safety to operators and maintenance personnel.

The simple, durable design is manufactured in a standard 6'-6" (1981mm) length or to suit site conditions. The tipping angle and counterweight positions are easily adjusted and can be fine-tuned to optimize regular operations. The tip chute is designed to merge baggage at a dispensing angle typically no greater than 30°.

# Tip Chute

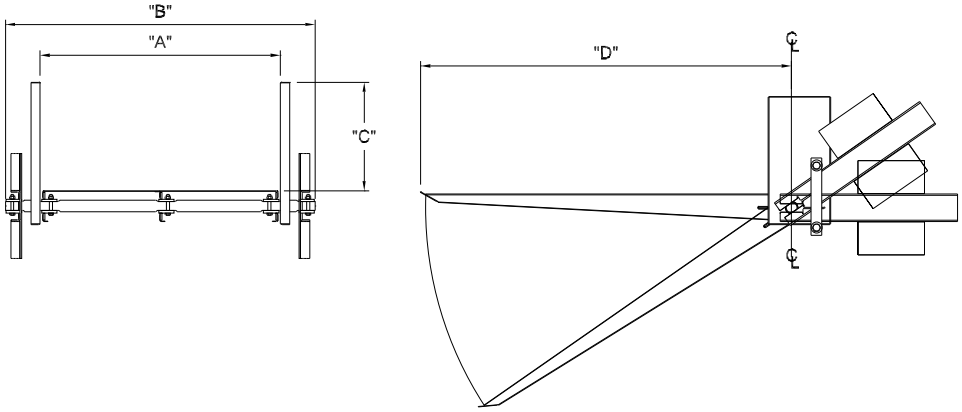


| TIP CHUTE SPECIFICATIONS | |
|---|---|
| **Description** | **G&S Standards** |
| **Dimensions** | |
| Betw een Frame Width ("A") | 33" (838mm), 36" (914mm), 39" (991mm), 51" (1295mm) |
| Overall Width ("B") | 48½" (1232mm), 51½" (1308mm), 54½" (1384mm), 66½" (1689mm) |
| Side Guard Height ("C") | 9" (229mm), 12" (305mm), 21" (533mm) |
| Chute Length ("D") | 72" (1829mm) |

# TIP CHUTE

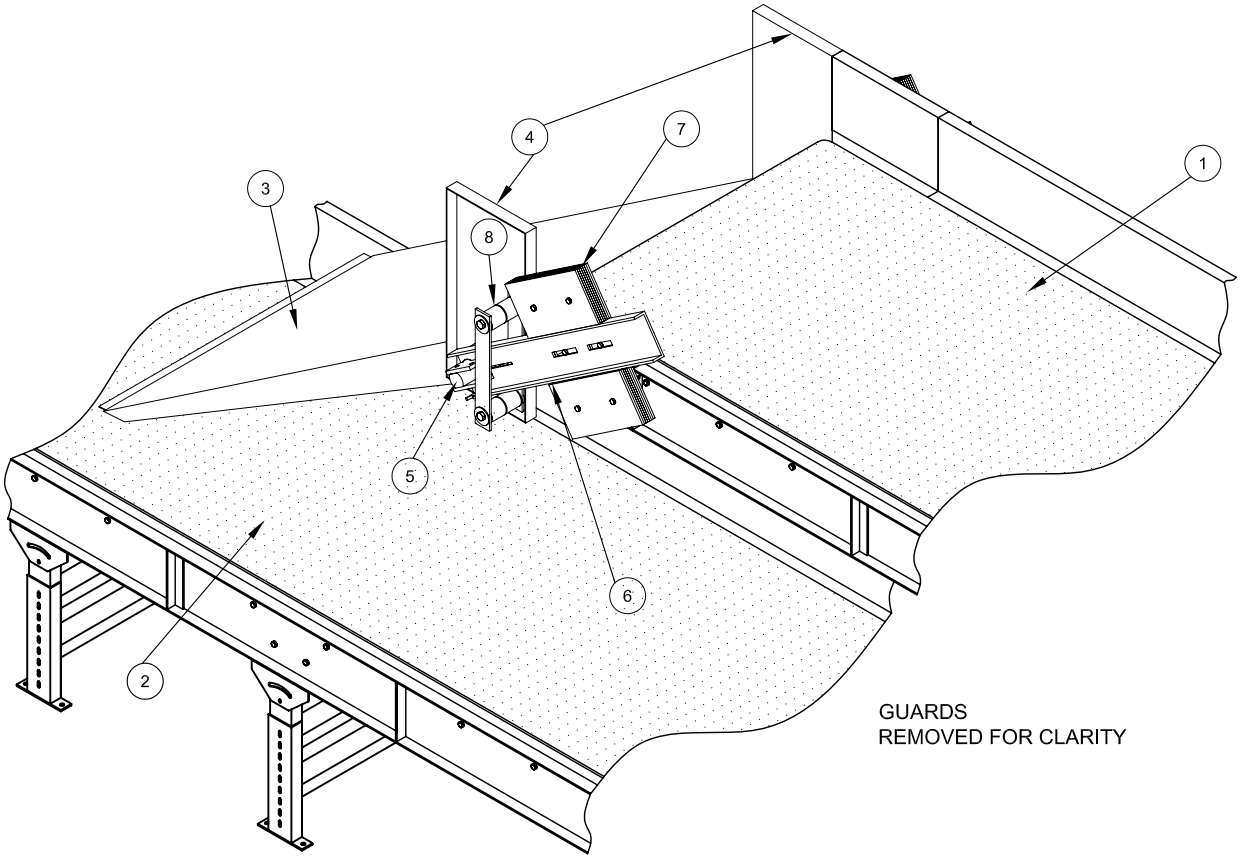


ISOMETRIC VIEW

| ITEM | COMPONENT |
|---|---|
| 1 | Upper GT Conveyor |
| 2 | Relieving Conveyor (Can be GT or Pallet Loop) |
| 3 | Deck Weldment |
| 4 | Side Guards |
| 5 | Pivot Shaft |
| 6 | Adjustable Counterweight Arm Mechanism |
| 7 | Counterweights (TYP) |
| 8 | Bumper Stops |

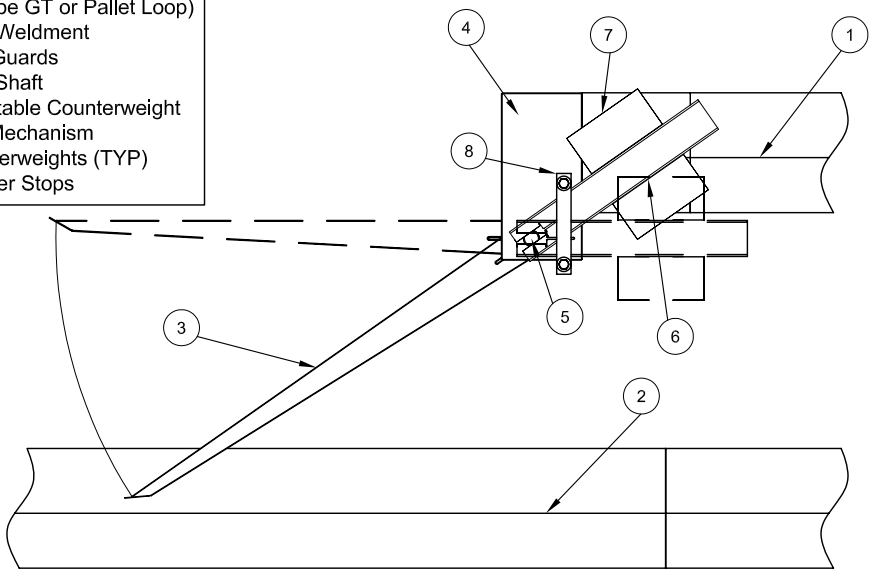


ELEVATION VIEW